INTEGRAL LITE

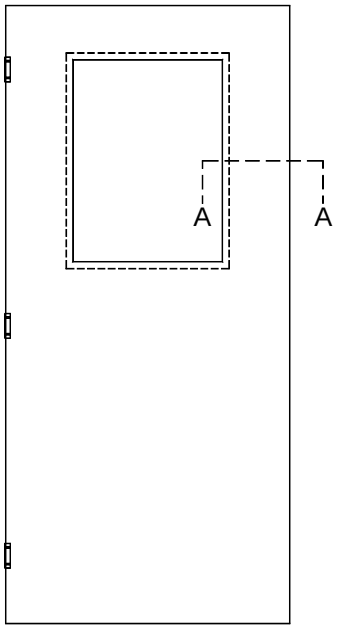

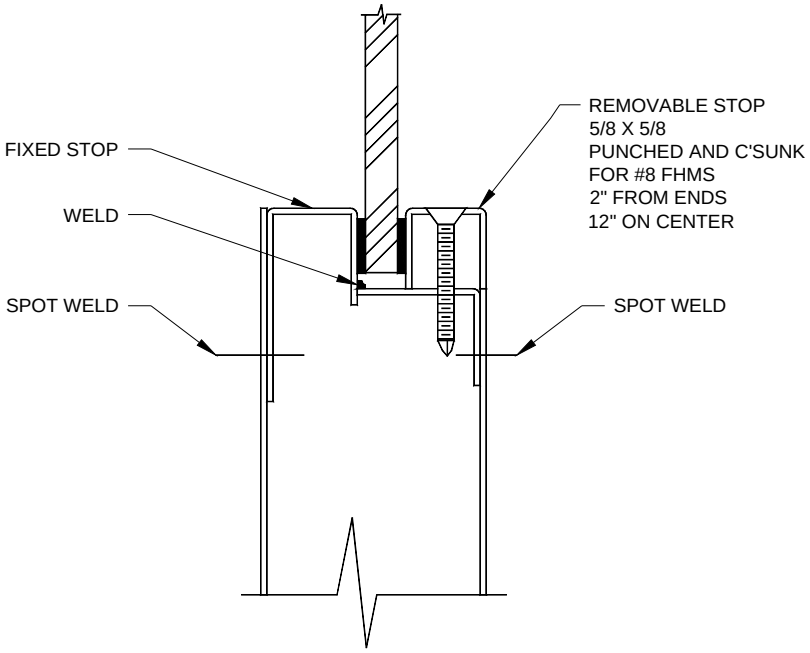

A-A

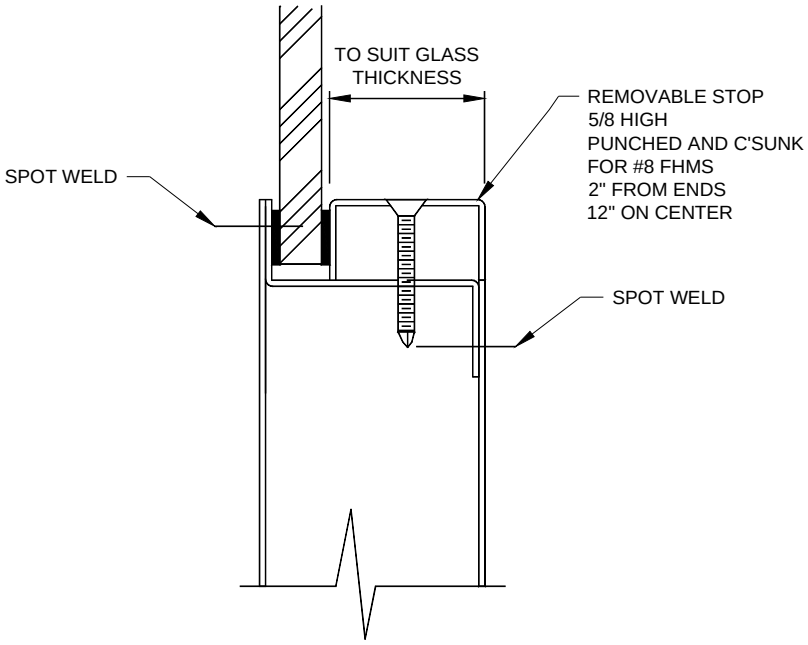

A-A
(OPTIONAL)

1.) 18 GA GLASS STOP (OTHER GAUGES AVAILABLE)
2.) REMOVABLE STOP IS PUNCHED AND COUNTERSUNK
2" FROM ENDS AND 12" ON CENTER (MIN 2 PER SIDE)